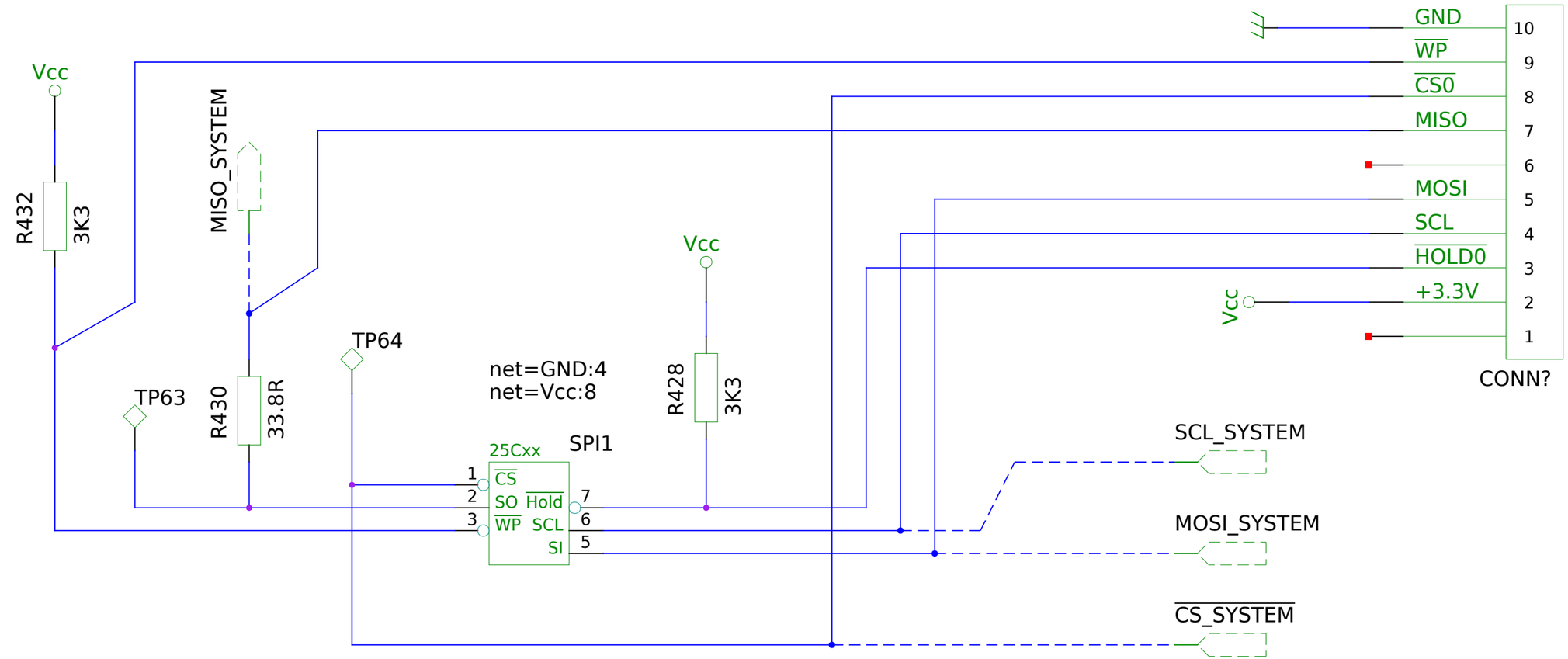

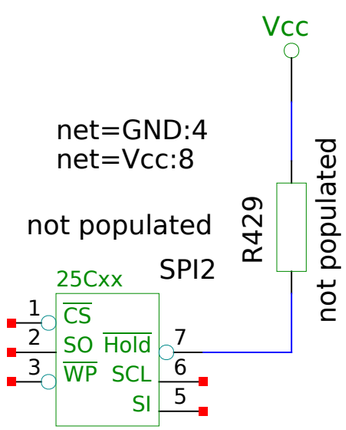

Zerocat Flash Access

Interfacing BIOS Chips in Hardware Protection Mode

git://zerocat.org/zerocat/projects/zerocat-flash-access

TITLE			
FILE:	x220-spi-flash-connector-page01.sch	REVISION:	v0.3.2 (master)
PAGE	OF	DRAWN BY:	kmx